Yealink WH64 Datasheet

Yealink WH64 DECT Wireless Headset

The WH64 is a wireless headset for business communication. It integrates DECT and Bluetooth modes, offering efficiency and flexibility.

Its advanced acoustic shield technology 2.0 filters out background noise for clear sound transmission. The busylight signals your call status to avoid interruptions. Ergonomically designed for an all-day comfortable wearing experience. With high-quality materials and a lightweight build, it provides a solid experience. It connects seamlessly with IP phones and UC platforms for plug-and-play and device switching. Ideal for clear conversations and smooth office experiences.

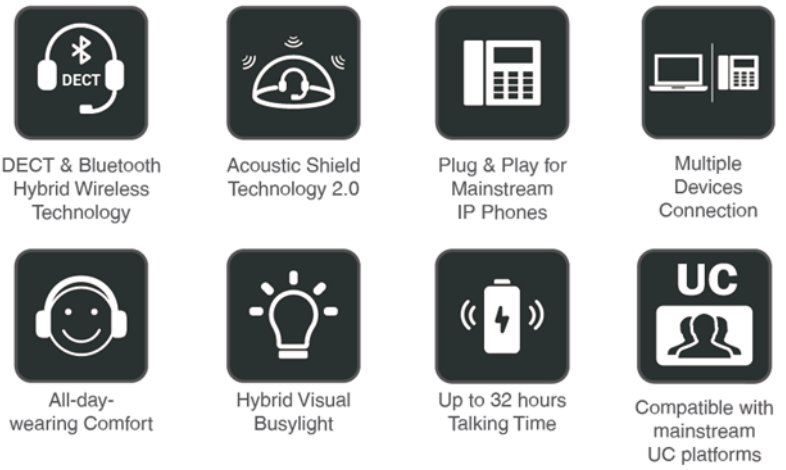



Key Features

DECT & Bluetooth Wireless Technology

Yealink's WH64 headset integrates both DECT and Bluetooth modes, enabling flexible signal switching without a base. Whether you're in a busy office or working remotely, this headset ensures clear and professional conversations.

Multiple Devices Plug & Play

The base is equipped with multiple USB ports, allowing simultaneous connections to a computer and an IP phone. Seamlessly connect with popular IP phones and collaborate effortlessly with leading UC platforms by using a USB cable for plug-and-play, efficient connectivity. Native integration with Yealink IP phones enables smooth device switching, delivering a professional unified office experience.

Acoustic Shield Technology 2.0

WH64 incorporates Yealink's acoustic shield 2.0 technology, utilizing three built-in microphones to block background noise and ensure clear communication automatically. This advanced feature eliminates

interference from various sources, allowing effective communication in busy offices or noisy open work environments.

All-Day Comfort

WH64 is designed to meet the highest ergonomic standards, offering optimal support and comfort for extended use. Its lightweight design and carefully selected materials provide durability and stability.

Visual Busylight

The WH64 headset features a dual-sided busylight and the option to add an external BLT60 light, providing practicality in office settings. WH64 enables a clear understanding of your work status by displaying it with different colors, preventing unintended interruptions during work.

How To

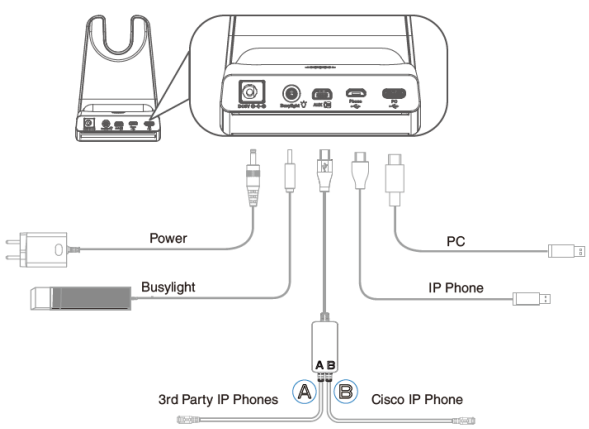

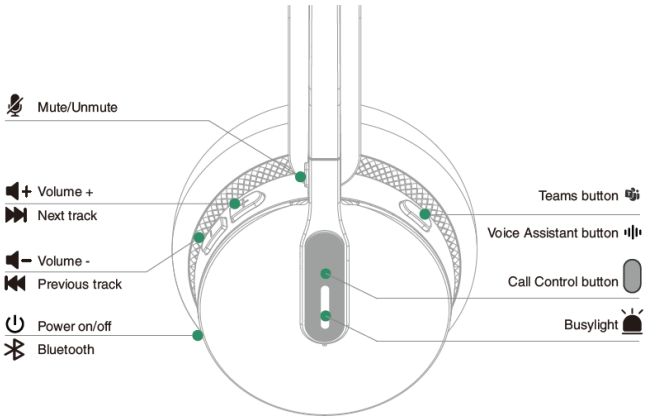

Specifications

Specifications	Introduction
General	• Port - 1 x micro USB 2.0 port -1 x Type-C USB 2.0 port -1 x mini USB port -1 x DC power port -1 x busylight port -1 x Type-C USB 2.0 (on headset) • Charging stand (for headset) • USB connectivity to PC and IP phone • Integrated busylight LED indicator • Boom arm adjustable: 280° • Charging stand (for headset)

	• WH64 Mono - Base:180 g - Headset: 92 g • WH64 Dual: - Base: 180g - Headset: 151 g
Battery	• Talk time: - Dect mode: up to 14 hours (Mono), up to 16 hours (Dual) ; - Bluetooth mode: up to 26 hours (Mono), up to 32 hours (Dual) • Music time: - Dect mode: up to 14 hours (Mono), up to 17 hours (Dual) - Bluetooth mode: up to 41 hours (Mono), up to 48 hours (Dual) • Standby time: 157 hours (Mono), 195 hours (Dual) • Charging time: 1.5 hours (5 V/1.2 A)
DECT	• Wireless range: up to 185 m/606 feet • Frequency bands: - 1880 – 1900 MHz (Europe), - 1920 – 1930 MHz (US) • Secure DECT (level): Step C: authentication – DSAA2, encryption – DSC2 (128 bit)
Bluetooth	• Bluetooth® device • Bluetooth version: Bluetooth 5.2 • Bluetooth profiles: HFP v1.8, A2DP v1.3.2, AVRCP v1.6.2, SPP v1.2 • Operating range: up to 50m/164 feet
Audio	• Speaker size: Φ 30 • Speaker frequency range: 20 Hz-20 kHz • Microphone sensitivity: -38±1dBV/Pa • Microphone frequency range: 100Hz-10kHz • Talk mode: wideband, 100 Hz~8 kHz, 16 kHz sample rate • Music mode: full-band, 20 Hz~20 kHz, 48 kHz sample rate, Stereo (Stereo only supported by Dual headset) • Hearing Protection - Peak Block Protection (EN50332) - Australian G616 Protection (AU G616) - Daily Noise Exposure Protection

Call Control	• Answer/End/Reject a call • Hold/Unhold call • Volume up/down • Microphone mute • Move the microphone boom arm up to mute, or down to unmute
Package Features	• Package contents: - Power adapter - Dual or mono headset - WHB640 base - Drawstring bag - 1 x 1.2m USB-C to USB-A cable - 1 x 0.8m Micro USB to USB A cable - Quick start guide • Optional accessories: - Wireless Headset Adapter EHS62 - Telephone cable for WH64/WH65/WH68 - Busylight BLT60 • WH64 Dual： - Base: 0.172kg - Headset: 0.136kg - N.W/CTN: 0.494kg - G.W/CTN: 0.788kg WH64 Mono： - Base: 0.172kg - Headset: 0.076kg - N.W/CTN: 0.434kg - G.W/CTN: 0.730kg • Giftbox size(mm): 192 x 238 x 99.5 • Carton meas(mm): 513 x 398 x 255 • Qty/CTN: 10

For more information, please go to the Yealink official website.